EXPERIMENT No 7:

Creating a Simple circuit on Breadboard

Student Guide

Prepared by BLIS GLOBAL Robotics Department

Copyright @2024

Objective

In this experiment, you will learn how to build a simple electrical circuit on a breadboard using basic electronic components such as an LED, a resistor, and a power source. This will help you understand the fundamentals of electric circuits and how to construct them using a breadboard.

Materials Required

- Breadboard
- LED (Light Emitting Diode)
- 330-ohm resistor (or similar value to limit current)
- Jumper wires
- 9V battery or 5V power supply (depending on the voltage required)
- 9V battery connector (if using a 9V battery)

What is a Breadboard?

A breadboard is a tool used to build and test circuits without soldering. It has rows of connected holes where you can insert electronic components and wires to create temporary circuits.

- The **vertical columns** on the sides are usually connected and are used for power distribution (called **power rails**).

- The **horizontal rows** in the middle are used for connecting components.

Step-by-Step Instructions

1. Identify the Components

- **LED:** LEDs have two legs; the longer leg is the positive (anode), and the shorter leg is the negative (cathode).
- **Resistor:** A resistor limits the current flowing through the circuit, protecting components like the LED from burning out.

2. Set Up the Breadboard

- Connect the **positive terminal** of the power supply (e.g., the **red wire** from a 9V battery) to one of the power rails on the breadboard.
- Connect the **negative terminal** (e.g., the **black wire**) to the other power rail.

3. Insert the LED

- Place the **anode (positive leg)** of the LED in one of the breadboard's rows.
- Place the **cathode (negative leg)** of the LED into a different row, but on the same side of the breadboard.

4. Connect the Resistor

- Insert one leg of the **330-ohm resistor** into the same row where the **cathode (short leg)** of the LED is connected.
- Insert the other leg of the resistor into a different row, not connected to the LED.

5. Power the Circuit

- Use a **jumper wire** to connect the power rail (where the **negative terminal of the power supply** is connected) to the row where the other leg of the **resistor** is inserted.
- Use another **jumper wire** to connect the power rail (where the **positive terminal** is connected) to the row where the **anode of the LED** is connected.

6. Turn on the Power

- Connect your power supply (either 9V battery or 5V power source). The LED should light up.
- If the LED does not turn on, check your connections:
  - Ensure the **long leg (anode)** of the LED is connected to the **positive power rail**.
  - Ensure the **short leg (cathode)** of the LED is connected to the resistor and then to the **negative power rail**.

7. Circuit Diagram (Schematic)

Refer to this basic schematic for understanding how the circuit is connected:

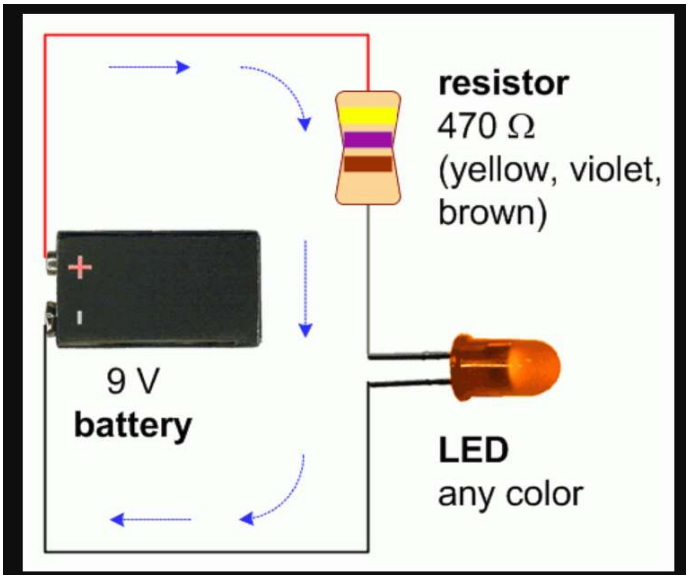

Key Learning Points

- **Polarity:** Understand the importance of correctly connecting polarized components like LEDs.
- **Resistor Function:** The resistor limits the current in the circuit to protect the LED.
- **Breadboard Use:** Learn how to use a breadboard to build circuits without soldering.

Troubleshooting Tips

- If the **LED doesn't light up**, double-check the polarity of the LED. The **long leg** should be connected to the **positive** side of the power supply.
- Make sure all components are securely connected in the breadboard.

- Ensure the resistor is in the correct position to limit the current to the LED.

Additional Tasks

- Experiment with using different colored LEDs and resistor values to see how they affect the brightness of the LED.
- Add a switch to your circuit to control when the LED turns on and off.
- Build a parallel circuit with multiple LEDs.

By completing this experiment, you will have a solid understanding of how to create and test simple circuits on a breadboard. This is a fundamental skill used in electronics to prototype and test designs.